Heater/Air Conditioner without PCC: Model 379 Family

SK25756 A 01

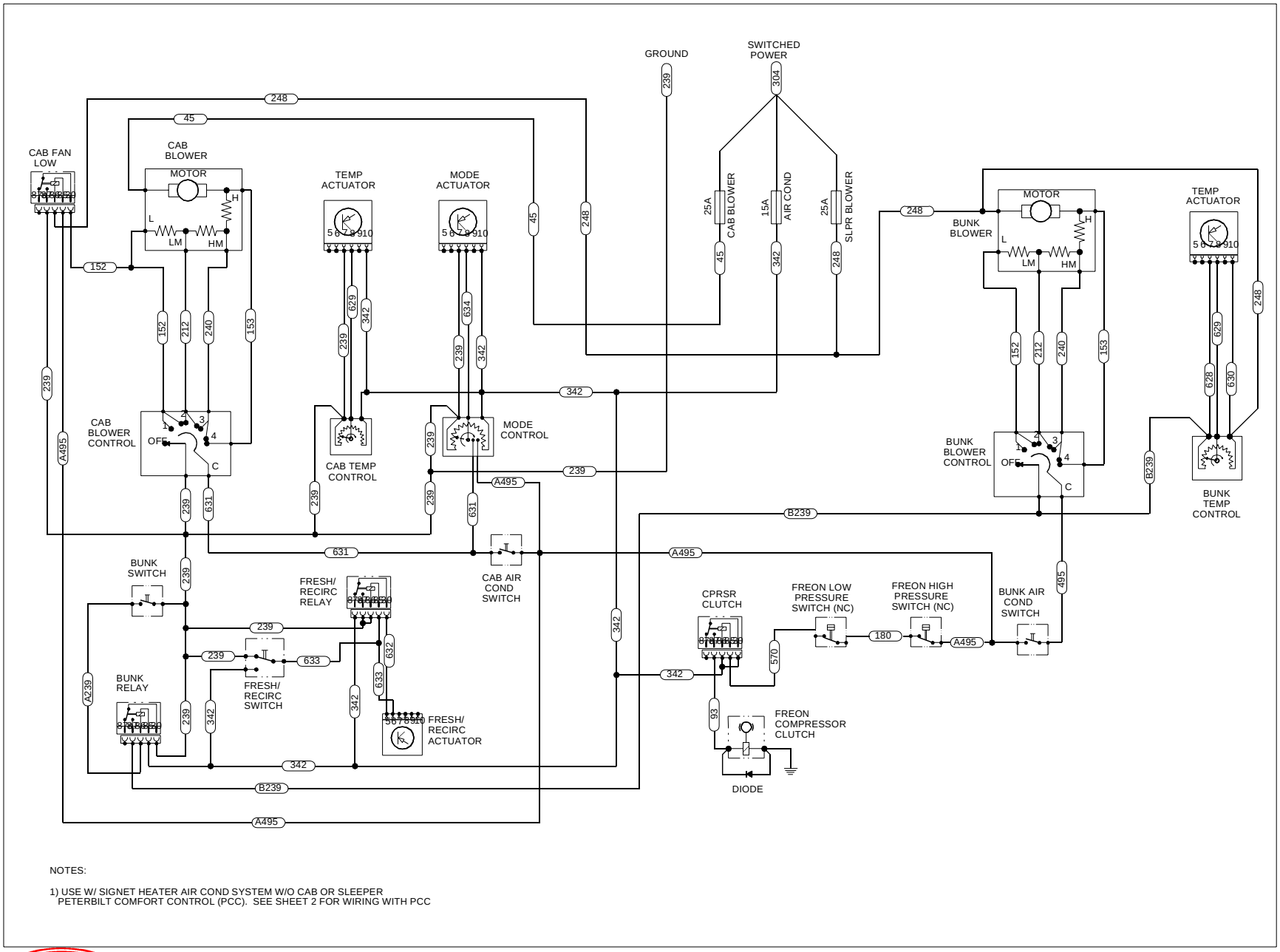

NOTES:

1) USE W/ SIGNET HEATER AIR COND SYSTEM W/O CAB OR SLEEPER PETERBILT COMFORT CONTROL (PCC). SEE SHEET 2 FOR WIRING WITH PCC

Peterbilt
A DIVISION OF PACCAR

PD803099.FRM

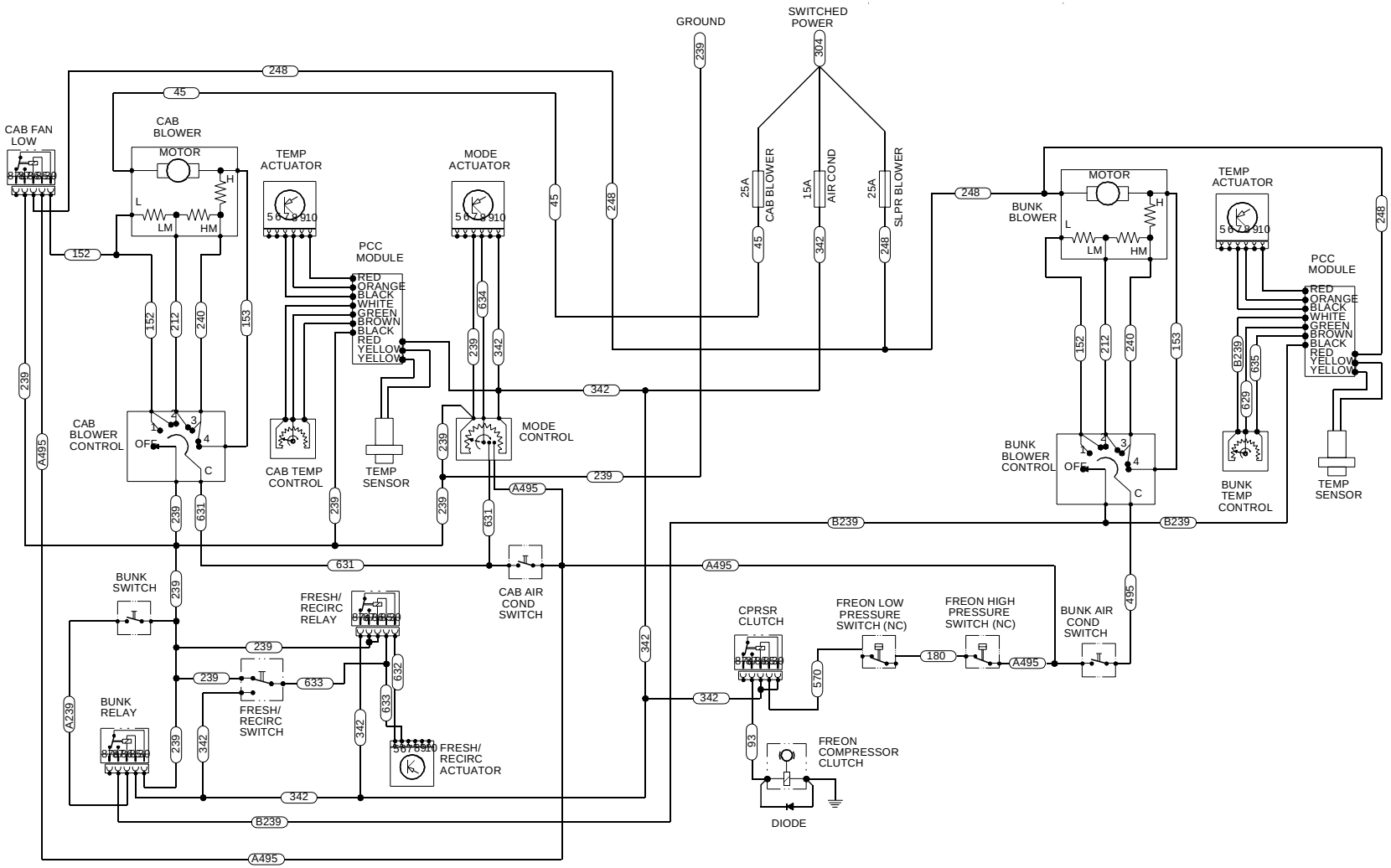

NOTES:

1) USE W/ SIGNET HEATER AIR COND SYSTEM WITH CAB OR SLEEPER PETERBILT COMFORT CONTROL (PCC). SEE SHEET 1 FOR WIRING W/O PCC. CAB AND SLEEPER ARE INDEPENDENT MODULES, MAY HAVE ONE WITHOUT THE OTHER.